Swanky
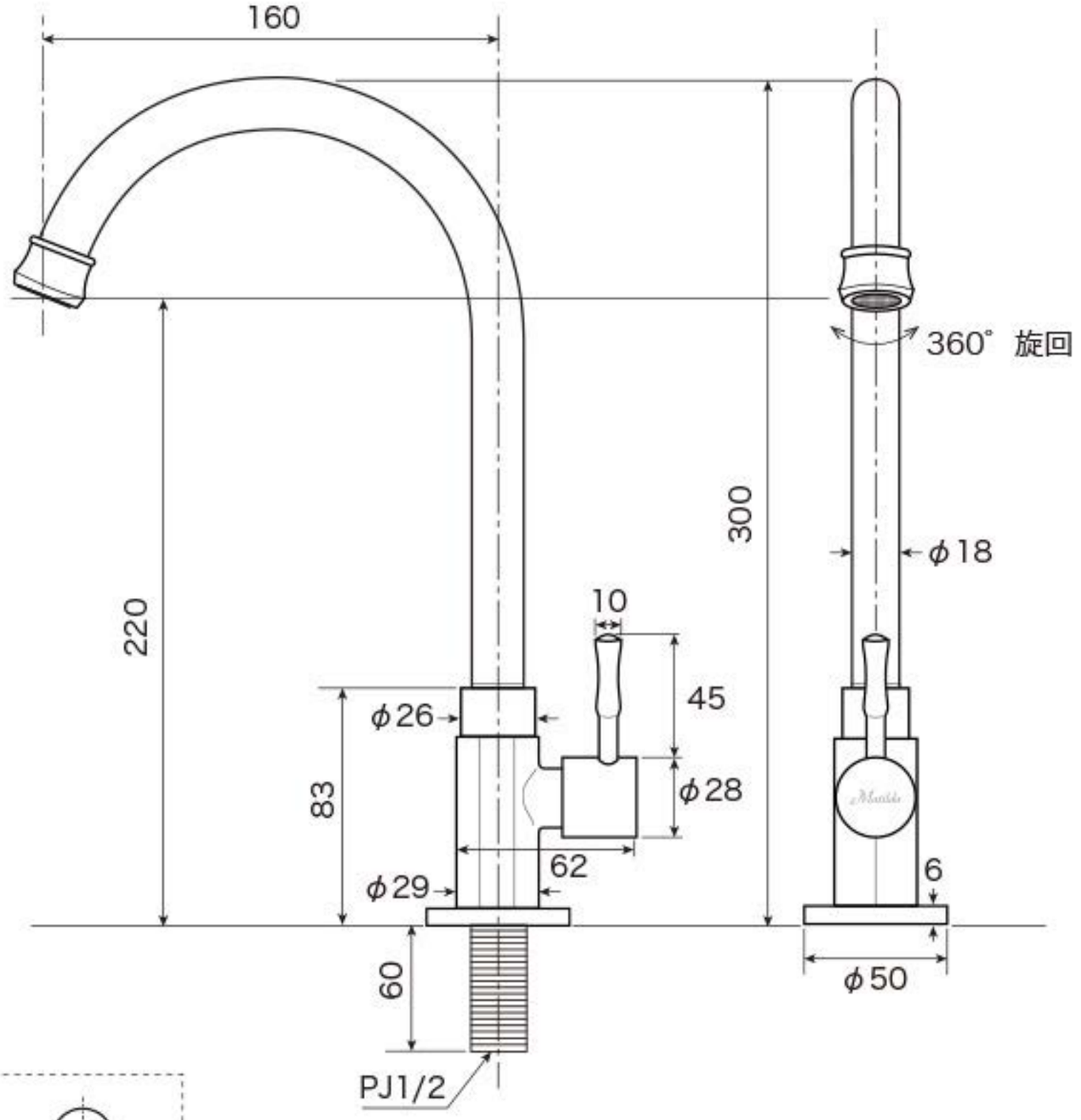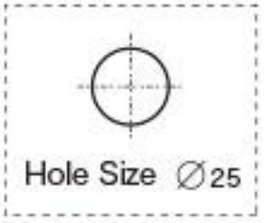
Matilda
Primal Faucet Collection